Mounting Plate for 19" Case and Subrack, 84 HP, 160 mm Board Length

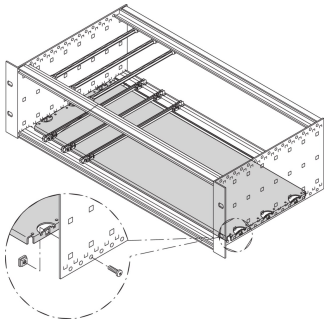

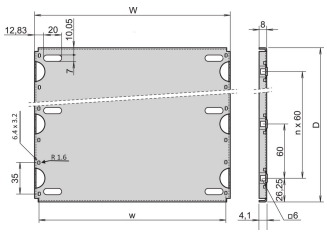

Material	HP	W	w	D
34562745	28	146,87	137,16	112,50
34562749	28	146,87	137,16	172,50
34562753	28	146,87	137,16	232,50
34562757	28	146,87	137,16	292,50
34562746	42	217,99	208,28	112,50
34562750	42	217,99	208,28	172,50
34562754	42	217,99	208,28	232,50
34562758	42	217,99	208,28	292,50
34562747	63	324,67	314,96	112,50
34562751	63	324,67	314,96	172,50
34562755	63	324,67	314,96	232,50
34562759	63	324,67	314,96	292,50
34562748	84	431,35	421,64	112,50
34562752	84	431,35	421,64	172,50
34562756	84	431,35	421,64	232,50
34562760	84	431,35	421,64	292,50
34562870	84	431,35	421,64	352,50
34562871	84	431,35	421,64	412,50

NÚMERO DE CATÁLOGO

34562-748

Mounting plate for heavy components or proprietary electronic assemblies. Suitable for RatiopacPRO/-AIR, CompacPRO and EuropacPRO.

Guide rails Type 4,4” and type strengthened cannot be used in combination with a mounting plate. Top / bottom cover which will be inserted into the groove of the light (type L) horizontal rails cannot be used in combination with a mounting plate.

CARACTERISTICAS

For assembly of heavy components

Mounting plate, full width: The mounting plate is as wide as the subrack/system case and is fixed to the side panels

Mounting plate, partial width: The partial width mounting plate fixed to the side panel by means of an assembly strip

The chassis plate can´t be combined with EMC top- / bottom covers

RoHS COMPLIANT

CARATERÍSTICAS DO PRODUTO

Rack Width: 84HP

Quantidade por embalagem: 1

Profundidade: 112.5mm

Material: Aluminio

Família de produtos: EuropacPRO; PropacPRO; RatiopacPRO; CompacPRO

Product Type: Mounting Plate

Largura: 324.67mm

Works With: Subracks

Net Weight: 0.25kg

*The price shown is the per piece price and does not include VAT. Depending on local conditions, packaging and freight charges might not be included. Where these charges should be part of the total price, they are included in the quote. The price given is a non-binding recommended retail price (RRP), which is the nVent list price. The final sales prices of local distributors may vary. Quotations requested or generated on

SCHROFF.nVent.com are only valid for commercial customers (B2B). The lead time displayed above is an estimate for this item to be dispatched from an nVent Schroff facility. Transit delivery times are not included in this estimate, as transit time may vary, depending on delivery address, parcel dimensions, and other factors. Cut-outs and modifications placed in non-recommended areas ("collision detected") for configured products may be subject to additional engineering and/or design costs, which may increase initially quoted prices.

DETALHES ADICIONAIS DO PRODUTO

Please order assembly kit for mounting plate separately.

Other versions on request.

Fixing strips required for partial width, please order separately.

AVISO

Os produtos nVent devem ser instalados e utilizados apenas conforme indicado nas fichas de instrução do produto e materiais de treinamento da nVent. As fichas de instrução estão disponíveis em www.nVent.com e com nossos representantes de atendimento ao cliente nVent. A instalação inadequada, uso incorreto, aplicação incorreta ou outra falha qualquer em seguir completamente as instruções e avisos da nVent podem levar ao mau funcionamento do produto, danos à propriedade, lesões corporais graves e morte, e/ou anular sua garantia.

North America
All locations
+1.763.422.2661
Chat with us:
nvent.com/schroff

Europe
Straubenhardt, Germany
+49.7082.794.0
Betschdorf, France
+33.3.88.90.64.90
Warsaw, Poland
+48.22.209.98.35
Assago, Italy
+39.02.932.7141
Chat with us:
nvent.com/schroff

Asia
Shanghai, China
+86.21.2412.6943
Qingdao, China
+86.532.8771.6101
Singapore
+65.6768.5800
Shin-Yokohama, Japan
+81.45.476.0271
Chat with us:
nvent.com/schroff

Middle East & India
Dubai, United Arab Emirates
+971.4.378.1700
Bangalore, India
+91.80.6715.2001
Istanbul, Turkey
+90.216.250.7374
Chat with us:
nvent.com/schroff

©2026 nVent. All nVent marks and logos are owned or licensed by nVent Services GmbH or its affiliates. All other trademarks are the property of their respective owners. nVent reserves the right to change specifications without notice.

This document is system-generated.