EuropacPRO Cover Plate for Bolting to Rugged Side Panel, 84 HP, 175 mm

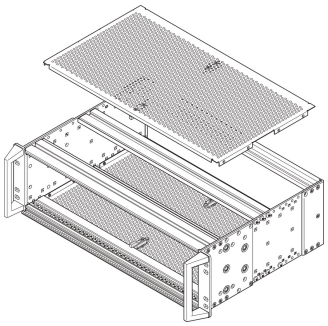

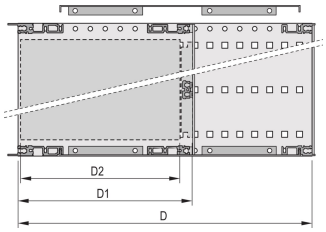

NÚMERO DE CATÁLOGO

24568-004

A cover plate is used for electromagnetic shielding or as mechanical protection.

CARACTERISTICAS

Perforation degree 58%

RoHS COMPLIANT

CARATERÍSTICAS DO PRODUTO

Profundidade: 175mm
Quantidade por embalagem: 2
Acabamento: Passivated
Material: Aluminio
Família de produtos: EuropacPRO
Product Type: Cover Plate
Rack Width: 84HP
Tipo: Perforated
Works With: Subracks
Net Weight: 0.25kg
Unidade de embalagem: Pair
Torque: 2.1N·m

*The price shown is the per piece price and does not include VAT. Depending on local conditions, packaging and freight charges might not be included. Where these charges should be part of the total price, they are included in the quote. The price given is a non-binding recommended retail price (RRP), which is the nVent list price. The final sales prices of local distributors may vary. Quotations requested or generated on SCHROFF.nVent.com are only valid for commercial customers (B2B). The lead time displayed above is an estimate for this item to be dispatched from an nVent Schroff facility. Transit delivery times are not included in this estimate, as transit time may vary, depending on delivery address, parcel dimensions, and other factors. Cut-outs and modifications placed in non-recommended areas ("collision detected") for configured products may be subject to additional engineering and/or design costs, which may increase initially quoted prices.

DETALHES ADICIONAIS DO PRODUTO

A top cover locking mechanism is optionally available that also fixes the top cover in the front and rear guide rail.

4 stainless steel EMC contact strips per subrack are required for shielding, please order separately.

AVISO

Os produtos nVent devem ser instalados e utilizados apenas conforme indicado nas fichas de instrução do produto e materiais de treinamento da nVent. As fichas de instrução estão disponíveis em www.nVent.com e com nossos representantes de atendimento ao cliente nVent. A instalação inadequada, uso incorreto, aplicação incorreta ou outra falha qualquer em seguir completamente as instruções e avisos da nVent podem levar ao mau funcionamento do produto, danos à propriedade, lesões corporais graves e morte, e/ou anular sua garantia.

North America
All locations
+1.763.422.2661
Chat with us:
nvent.com/schroff

Europe
Straubenhardt, Germany
+49.7082.794.0
Betschdorf, France
+33.3.88.90.64.90
Warsaw, Poland
+48.22.209.98.35
Assago, Italy
+39.02.932.7141
Chat with us:
nvent.com/schroff

Asia
Shanghai, China
+86.21.2412.6943
Qingdao, China
+86.532.8771.6101
Singapore
+65.6768.5800
Shin-Yokohama, Japan
+81.45.476.0271
Chat with us:
nvent.com/schroff

Middle East & India
Dubai, United Arab Emirates
+971.4.378.1700
Bangalore, India
+91.80.6715.2001
Istanbul, Turkey
+90.216.250.7374
Chat with us:
nvent.com/schroff

©2026 nVent. All nVent marks and logos are owned or licensed by nVent Services GmbH or its affiliates. All other trademarks are the property of their respective owners. nVent reserves the right to change specifications without notice.

This document is system-generated.