# Z-Rail for Connector, EN 60603-2, 20 HP

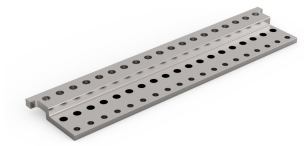

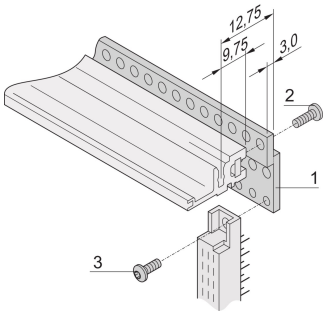


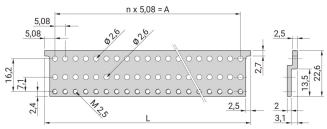


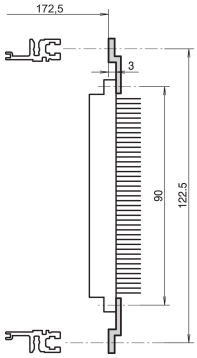


## NÚMERO DE CATÁLOGO

## 30822-025

Z-rail for connector in accordance with EN 60603-2 (DIN 41612).

## CARACTERISTICAS

Aluminum extrusion, anodized

Z-rails are bolted to the subrack for connector mounting (rear horizontal rail type ST, threaded insert inserted, insulation strip)

For connectors to EN 60603-2 (DIN 41612)

RoHS COMPLIANT

## CARATERÍSTICAS DO PRODUTO

Rack Width: 20HP

Quantidade por embalagem: 1

Acabamento: Anodized

Length: 101.6mm

Material: Aluminio

Família de produtos: EuropacPRO; RatiopacPRO; RatiopacPRO AIR; CompacPRO; PropacPRO

Product Type: Z-Rail

Works With: Subracks; Cases

*The price shown is the per piece price and does not include VAT. Depending on local conditions, packaging and freight charges might not be included. Where these charges should be part of the total price, they are included in the quote. The price given is a non-binding recommended retail price (RRP), which is the nVent list price. The final sales prices of local distributors may vary. Quotations requested or generated on SCHROFF.nVent.com are only valid for commercial customers (B2B). The lead time displayed above is an estimate for this item to be dispatched from an nVent Schroff facility. Transit delivery times are not included in this estimate, as transit time may vary, depending on delivery address, parcel dimensions, and other factors. Cut-outs and modifications placed in non-recommended areas ("collision detected") for configured products may be subject to additional engineering and/or design costs, which may increase initially quoted prices.

## DETALHES ADICIONAIS DO PRODUTO

For attaching the z-rail to the horizontal rail, both a threaded insert and Torx panhead screw are required; please order these separately.

## AVISO

Os produtos nVent devem ser instalados e utilizados apenas conforme indicado nas fichas de instrução do produto e materiais de treinamento da nVent. As fichas de instrução estão disponíveis em www.nVent.com e com nossos representantes de atendimento ao cliente nVent. A instalação inadequada, uso incorreto, aplicação incorreta ou outra falha qualquer em seguir completamente as instruções e avisos da nVent podem levar ao mau funcionamento do produto, danos à propriedade, lesões corporais graves e morte, e/ou anular sua garantia.


**North America**
All locations
+1.763.422.2661
Chat with us:
nvent.com/schroff

**Europe**
Straubenhardt, Germany
+49.7082.794.0
Betschdorf, France
+33.3.88.90.64.90
Warsaw, Poland
+48.22.209.98.35
Assago, Italy
+39.02.932.7141
Chat with us:
nvent.com/schroff

**Asia**
Shanghai, China
+86.21.2412.6943
Qingdao, China
+86.532.8771.6101
Singapore
+65.6768.5800
Shin-Yokohama, Japan
+81.45.476.0271
Chat with us:
nvent.com/schroff

**Middle East & India**
Dubai, United Arab Emirates
+971.4.378.1700
Bangalore, India
+91.80.6715.2001
Istanbul, Turkey
+90.216.250.7374
Chat with us:
nvent.com/schroff



©2026 nVent. All nVent marks and logos are owned or licensed by nVent Services GmbH or its affiliates. All other trademarks are the property of their respective owners. nVent reserves the right to change specifications without notice.

This document is system-generated.