EuropacPRO 19" Subrack Kit for Backplane, Shielded, 6 U, 355 mm

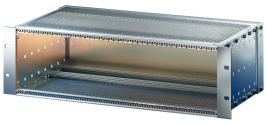

NÚMERO DE CATÁLOGO

24563-444

EMC Shielded subrack for backplane mounting, rear side covered by a rear panel.

CARACTERISTICAS

Subrack with side panel type F ("flexible"), front 19" bracket included, depth-adjustable 19" bracket sold separately (not included in items delivered)

Supplied as space-saving flat-pack

Modifications such as cutouts, different finishes or dimensions available

EMC of approximately 40 dB at 1 GHz, 30 dB at 2 GHz, assuming that the front is covered with shielded front panels, testing in accordance with VG 95373 part 15

IP 20, in accordance with IEC 60529

Aluminum construction

Internal and external dimensions in accordance with: IEC 60297-3-100, -101, IEEE 1101.1

Rear horizontal rail for backplane mounting with insulation strip

Horizontal rail type "light"

RoHS COMPLIANT

CARATERÍSTICAS DO PRODUTO

Rack Height: 6U

Profundidade (D): 355mm

Quantidade por embalagem: 1

For Mounting: Backplane

Board Depth: 160mm; 220mm; 280mm

Gasket Type: Textile EMC

Inclui alça: Não

Instalação: Rack

Em conformidade com: IEC 60297-3-103

EMC Shielding: Sim

Acabamento: Anodized; Passivated

Material: Aluminio

Product Type: Subrack/Chassis

Rack Width: 84HP

Static Load: 11kg

Net Weight: 4.34kg

*The price shown is the per piece price and does not include VAT. Depending on local conditions, packaging and freight charges might not be included. Where these charges should be part of the total price, they are included in the quote. The price given is a non-binding recommended retail price (RRP), which is the nVent list price. The final sales prices of local distributors may vary. Quotations requested or generated on SCHROFF.nVent.com are only valid for commercial customers (B2B). The lead time displayed above is an estimate for this item to be dispatched from an nVent Schroff facility. Transit delivery times are not included in this estimate, as transit time may vary, depending on delivery address, parcel dimensions, and other factors. Cut-outs and modifications placed in non-recommended areas ("collision detected") for configured products may be subject to additional engineering and/or design costs, which may increase initially quoted prices.

DETALHES ADICIONAIS DO PRODUTO

Individual configuration: broad range of variants in height, width and depth; guide rails for a wide variety of applications; interior options; accessories and mounting material.

DIAGRAMAS

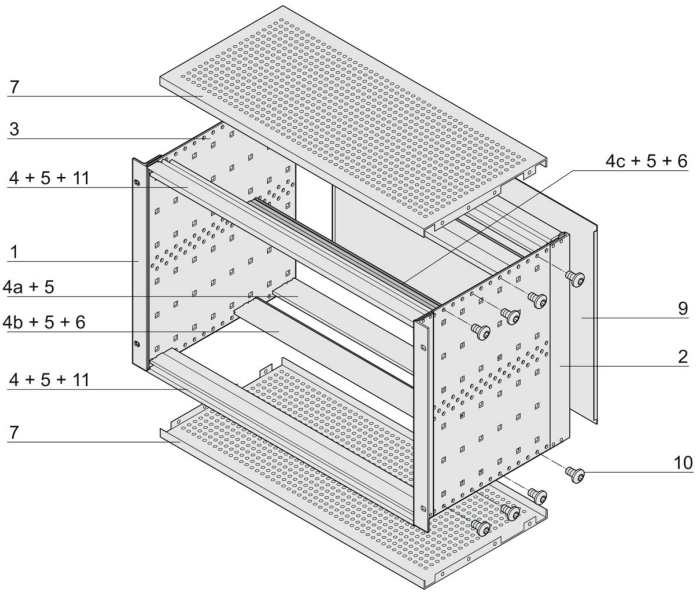

AVISO

Os produtos nVent devem ser instalados e utilizados apenas conforme indicado nas fichas de instrução do produto e materiais de treinamento da nVent. As fichas de instrução estão disponíveis em www.nVent.com e com nossos representantes de atendimento ao cliente nVent. A instalação inadequada, uso incorreto, aplicação incorreta ou outra falha qualquer em seguir completamente as instruções e avisos da nVent podem levar ao mau funcionamento do produto, danos à propriedade, lesões corporais graves e morte, e/ou anular sua garantia.

North America
All locations
+1.763.422.2661
Chat with us:
nvent.com/schroff

Europe
Straubenhardt, Germany
+49.7082.794.0
Betschdorf, France
+33.3.88.90.64.90
Warsaw, Poland
+48.22.209.98.35
Assago, Italy
+39.02.932.7141
Chat with us:
nvent.com/schroff

Asia
Shanghai, China
+86.21.2412.6943
Qingdao, China
+86.532.8771.6101
Singapore
+65.6768.5800
Shin-Yokohama, Japan
+81.45.476.0271
Chat with us:
nvent.com/schroff

Middle East & India
Dubai, United Arab Emirates
+971.4.378.1700
Bangalore, India
+91.80.6715.2001
Istanbul, Turkey
+90.216.250.7374
Chat with us:
nvent.com/schroff

©2026 nVent. All nVent marks and logos are owned or licensed by nVent Services GmbH or its affiliates. All other trademarks are the property of their respective owners. nVent reserves the right to change specifications without notice.

This document is system-generated.