Front Panel EMC Textile Shielding Kit, -40…+70°C, 5 U, 10 Pieces

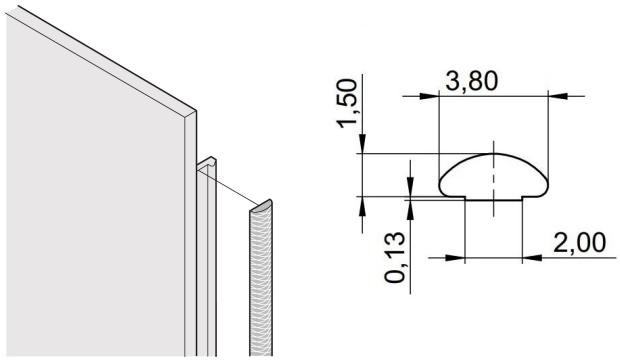

NÚMERO DE CATÁLOGO

21101-978

The textile EMC gaskets are inserted into a slot on the right hand side of the U-shaped front panels. The gaskets are glued to the front panel.

CARACTERISTICAS

Textile EMC gasket is affixed laterally on the front panel or in the groove of the right-hand profile as appropriate.

Profile seal is bonded onto the contact surface of the 19" bracket or of the rear angle and sets up the conductive connection to the U-shaped front panels

Temperature range -40 °C ... +70 °C

RoHS COMPLIANT

CARATERÍSTICAS DO PRODUTO

Rack Height: 5U

Quantidade por embalagem: 10

Material: Elastômero Termoplástico

Família de produtos: EuropacPRO; RatiopacPRO; RatiopacPRO AIR; PropacPRO; Frame Type Plug-In Unit

Product Type: Shielding Kit

Works With: Subracks; Cases; Front Panels

Gross Weight: 0.028kg

*The price shown is the per piece price and does not include VAT. Depending on local conditions, packaging and freight charges might not be included. Where these charges should be part of the total price, they are included in the quote. The price given is a non-binding recommended retail price (RRP), which is the nVent list price. The final sales prices of local distributors may vary. Quotations requested or generated on SCHROFF.nVent.com are only valid for commercial customers (B2B). The lead time displayed above is an estimate for this item to be dispatched from an nVent Schroff facility. Transit delivery times are not included in this estimate, as transit time may vary, depending on delivery address, parcel dimensions, and other factors. Cut-outs and modifications placed in non-recommended areas ("collision detected") for configured products may be subject to additional engineering and/or design costs, which may increase initially quoted prices.

DETALHES ADICIONAIS DO PRODUTO

EMC gaskets (textile) are required for shielding the front panels.

DIAGRAMAS

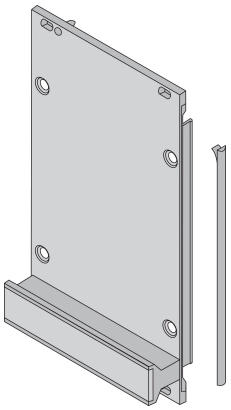

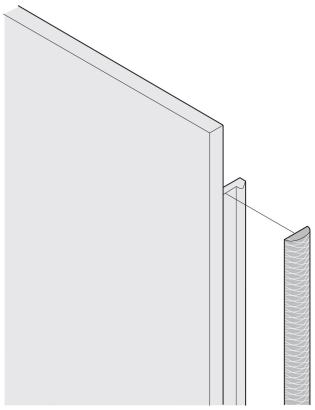

AVISO

Os produtos nVent devem ser instalados e utilizados apenas conforme indicado nas fichas de instrução do produto e materiais de treinamento da nVent. As fichas de instrução estão disponíveis em www.nVent.com e com nossos representantes de atendimento ao cliente nVent. A instalação inadequada, uso incorreto, aplicação incorreta ou outra falha qualquer em seguir completamente as instruções e avisos da nVent podem levar ao mau funcionamento do produto, danos à propriedade, lesões corporais graves e morte, e/ou anular sua garantia.

North America
All locations
+1.763.422.2661
Chat with us:
nvent.com/schroff

Europe
Straubenhardt, Germany
+49.7082.794.0
Betschdorf, France
+33.3.88.90.64.90
Warsaw, Poland
+48.22.209.98.35
Assago, Italy
+39.02.932.7141
Chat with us:
nvent.com/schroff

Asia
Shanghai, China
+86.21.2412.6943
Qingdao, China
+86.532.8771.6101
Singapore
+65.6768.5800
Shin-Yokohama, Japan
+81.45.476.0271
Chat with us:
nvent.com/schroff

Middle East & India
Dubai, United Arab Emirates
+971.4.378.1700
Bangalore, India
+91.80.6715.2001
Istanbul, Turkey
+90.216.250.7374
Chat with us:
nvent.com/schroff

©2026 nVent. All nVent marks and logos are owned or licensed by nVent Services GmbH or its affiliates. All other trademarks are the property of their respective owners. nVent reserves the right to change specifications without notice.

This document is system-generated.