Panheadschroef met kraag, kruiskop/sleuf, M2,5 x 12,3 mm, staal vernikkeld; 100 stuks

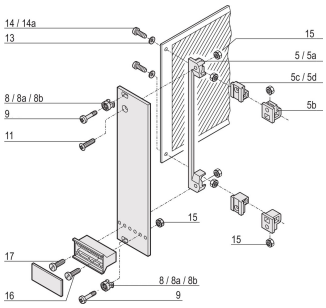

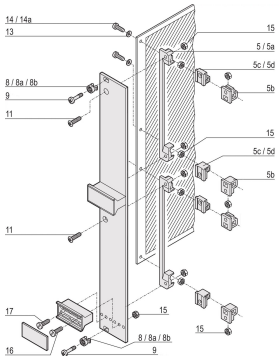

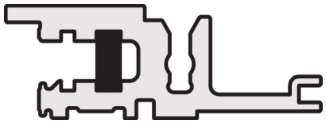

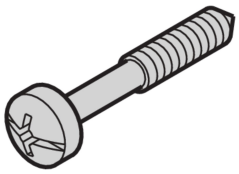

CATALOGUSNUMMER

21101-101

Integrated load spreading, replaces separate washer. Improved joint consistency (less variation from washer misalignment) Better vibration resistance, especially with serrated collars

KENMERKEN

For assembly of partial width front panels and plug-in units

For EuropacPRO and RatiopacPRO

Cross Recess / Slotted combines advantages of both imprints: it offers a high level of torque to achieve quick and easy installation and enhances rotational leverage. It is convenient to use while offering universal tool compatbility.

RoHS COMPLIANT

PRODUCTKENMERKEN

Lengte: 12.3mm

Materiaal: Staal

Afwerking: Vernikkeld

Hoeveelheid in verpakking: 100

Schroefdraadmaat: M2.5

Diepte: 14.3mm

Hoogte: 5mm

Producttype: Schroef

Type: Schroef

Breedte: 5mm
Werkt met: Frontpanelen
Hoofdtype aandrijving: Cross Recess/Slotted
Head Shape: Panhead
Shaft Collar: Ja
Brutogewicht: 0.056kg
Schroefdraadlengte: 12.3mm
Type schroefdraad: Metrisch
Aanhaalmoment: 0.3N·m

*The price shown is the per piece price and does not include VAT. Depending on local conditions, packaging and freight charges might not be included. Where these charges should be part of the total price, they are included in the quote. The price given is a non-binding recommended retail price (RRP), which is the nVent list price. The final sales prices of local distributors may vary. Quotations requested or generated on SCHROFF.nVent.com are only valid for commercial customers (B2B). The lead time displayed above is an estimate for this item to be dispatched from an nVent Schroff facility. Transit delivery times are not included in this estimate, as transit time may vary, depending on delivery address, parcel dimensions, and other factors. Cut-outs and modifications placed in non-recommended areas ("collision detected") for configured products may be subject to additional engineering and/or design costs, which may increase initially quoted prices.

WAARSCHUWING

nVent-producten moeten alleen worden geïnstalleerd en gebruikt zoals aangegeven in de instructiebladen en trainingsmateriaal van nVent. Instructiebladen zijn beschikbaar op www.nvent.com en bij uw nVent klantenservicevertegenwoordiger. Onjuiste installatie, misbruik, verkeerde toepassing of ander falen om de instructies en waarschuwingen van nVent volledig te volgen, kan leiden tot productstoringen, schade aan eigendommen, ernstig lichamelijk letsel en de dood en/of uw garantie ongeldig maken.

North America
All locations
+1.763.422.2661
Chat with us:
nvent.com/schroff

Europe
Straubenhardt, Germany
+49.7082.794.0
Betschdorf, France
+33.3.88.90.64.90
Warsaw, Poland
+48.22.209.98.35
Assago, Italy
+39.02.932.7141
Chat with us:
nvent.com/schroff

Asia
Shanghai, China
+86.21.2412.6943
Qingdao, China
+86.532.8771.6101
Singapore
+65.6768.5800
Shin-Yokohama, Japan
+81.45.476.0271
Chat with us:
nvent.com/schroff

Middle East & India
Dubai, United Arab Emirates
+971.4.378.1700
Bangalore, India
+91.80.6715.2001
Istanbul, Turkey
+90.216.250.7374
Chat with us:
nvent.com/schroff

©2026 nVent. Alle nVent-merken en -logo's zijn eigendom van of in licentie gegeven door nVent Services GmbH of haar gelieerde ondernemingen. Alle andere handelsmerken zijn het eigendom van hun respectieve eigenaren. nVent behoudt zich het recht voor om specificaties zonder kennisgeving te wijzigen.

Dit document is door het systeem gegenereerd.