Panheadschroef, Pozidriv, kruiskop, M2,5 x 8 mm, staal vernikkeld; 100 stuks

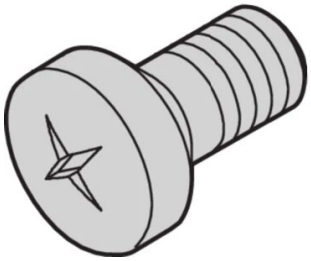

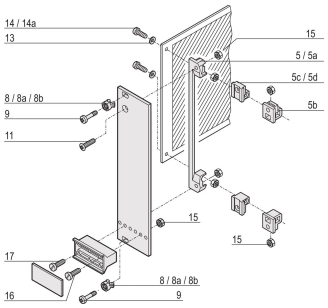

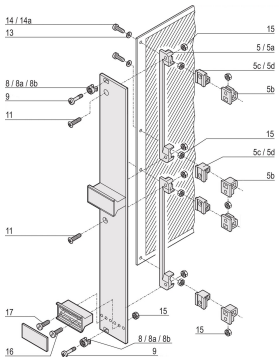

CATALOGUSNUMMER

21101-069

Panhead schroef, Pozidrive.

KENMERKEN

Panhead schroef, pozidrive

Pozidriv has a set of 45° radial indentations from the main cross recess leading to 4 additional contact points and greater stabilization to provide a greater contact surface. As a result, it decrease cam-out and wear, which allows greater torque to be applied.

RoHS COMPLIANT

PRODUCTKENMERKEN

Lengte: 8mm

Afwerking: Vernikkeld

Hoeveelheid in verpakking: 100

Schroefdraadmaat: M2.5

Materiaal: Staal

Productserie: Plug-in-eenheid frametype

Producttype: Schroef

Type: Panheadschroef

Werkt met: Achterplaten; Testadapters

Aanhaalmoment: 0.3N·m

Hoofdtype aandrijving: Pozidriv

Head Shape: Panhead

Nettogewicht: 0.048kg

Schroefdraadlengte: 8mm

*The price shown is the per piece price and does not include VAT. Depending on local conditions, packaging and freight charges might not be included. Where these charges should be part of the total price, they are included in the quote. The price given is a non-binding recommended retail price (RRP), which is the nVent list price. The final sales prices of local distributors may vary. Quotations requested or generated on SCHROFF.nVent.com are only valid for commercial customers (B2B). The lead time displayed above is an estimate for this item to be dispatched from an nVent Schroff facility. Transit delivery times are not included in this estimate, as transit time may vary, depending on delivery address, parcel dimensions, and other factors. Cut-outs and modifications placed in non-recommended areas ("collision detected") for configured products may be subject to additional engineering and/or design costs, which may increase initially quoted prices.

WAARSCHUWING

nVent-producten moeten alleen worden geïnstalleerd en gebruikt zoals aangegeven in de instructiebladen en trainingsmateriaal van nVent. Instructiebladen zijn beschikbaar op www.nvent.com en bij uw nVent klantenservicevertegenwoordiger. Onjuiste installatie, misbruik, verkeerde toepassing of ander falen om de instructies en waarschuwingen van nVent volledig te volgen, kan leiden tot productstoringen, schade aan eigendommen, ernstig lichamelijk letsel en de dood en/of uw garantie ongeldig maken.

North America
All locations
+1.763.422.2661
Chat with us:
nvent.com/schroff

Europe
Straubenhardt, Germany
+49.7082.794.0
Betschdorf, France
+33.3.88.90.64.90
Warsaw, Poland
+48.22.209.98.35
Assago, Italy
+39.02.932.7141
Chat with us:
nvent.com/schroff

Asia
Shanghai, China
+86.21.2412.6943
Qingdao, China
+86.532.8771.6101
Singapore
+65.6768.5800
Shin-Yokohama, Japan
+81.45.476.0271
Chat with us:
nvent.com/schroff

Middle East & India
Dubai, United Arab Emirates
+971.4.378.1700
Bangalore, India
+91.80.6715.2001
Istanbul, Turkey
+90.216.250.7374
Chat with us:
nvent.com/schroff

©2026 nVent. Alle nVent-merken en -logo's zijn eigendom van of in licentie gegeven door nVent Services GmbH of haar gelieerde ondernemingen. Alle andere handelsmerken zijn het eigendom van hun respectieve eigenaren. nVent behoudt zich het recht voor om specificaties zonder kennisgeving te wijzigen.

Dit document is door het systeem gegenereerd.