Tornillo avellanado, elevado, Torx 8, M2,5 x 8 mm, acero niquelado; 100 piezas

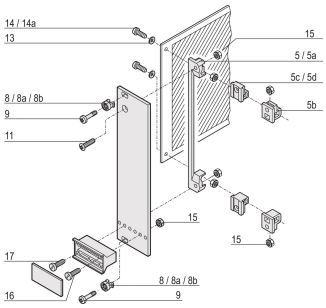

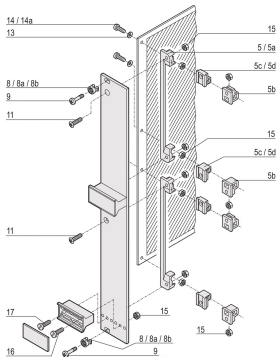

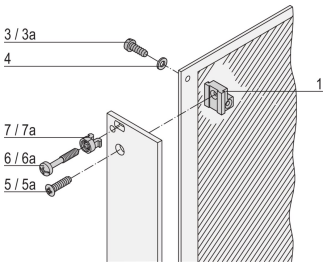

NÚMERO DE CATÁLOGO

24560-164

Los tornillos avellanados se utilizan para numerosas opciones de montaje en una caja de suback o de escritorio.

CARACTERÍSTICAS

- Tornillo avellanado
- Cross Recess imprint offers a high level of torque to achieve quick and easy installation
- Torx imprint bears greater torque
- The Torx star-shaped head prevents cam-out

RoHS COMPLIANT

ATRIBUTOS DEL PRODUCTO

- Longitud: 8mm
- Material: Acero
- Acabado: Niquelado
- Cantidad del paquete: 100
- Tamaño de rosca: M2.5
- Altura: 4.7mm
- Tipo de producto: Tornillo
- Tipo: Tornillo avellanado
- Anchura: 4.7mm
- Compatible con: Paneles frontales
- Drive Type Main: Torx 8
- Head Shape: Avellanado
- Longitud de rosca: 8mm
- Tipo de rosca: Métrica

Par de apriete: 0.3N·m

*The price shown is the per piece price and does not include VAT. Depending on local conditions, packaging and freight charges might not be included. Where these charges should be part of the total price, they are included in the quote. The price given is a non-binding recommended retail price (RRP), which is the nVent list price. The final sales prices of local distributors may vary. Quotations requested or generated on SCHROFF.nVent.com are only valid for commercial customers (B2B). The lead time displayed above is an estimate for this item to be dispatched from an nVent Schroff facility. Transit delivery times are not included in this estimate, as transit time may vary, depending on delivery address, parcel dimensions, and other factors. Cut-outs and modifications placed in non-recommended areas ("collision detected") for configured products may be subject to additional engineering and/or design costs, which may increase initially quoted prices.

ADVERTENCIA

Los productos nVent deben instalarse y usarse solo como se indica en las hojas de instrucciones y materiales de capacitación del producto nVent. Instruction sheets are available at www.nvent.com and from your nVent customer service representative. La instalación incorrecta, el mal uso, la aplicación incorrecta u otras fallas en el seguimiento completo de las instrucciones y advertencias de nVent pueden causar el mal funcionamiento del producto, daños a la propiedad, lesiones corporales graves y la muerte y/o anular la garantía.

North America
All locations
+1.763.422.2661
Chat with us:
nvent.com/schroff

Europe
Straubenhardt, Germany
+49.7082.794.0
Betschdorf, France
+33.3.88.90.64.90
Warsaw, Poland
+48.22.209.98.35
Assago, Italy
+39.02.932.7141
Chat with us:
nvent.com/schroff

Asia
Shanghai, China
+86.21.2412.6943
Qingdao, China
+86.532.8771.6101
Singapore
+65.6768.5800
Shin-Yokohama, Japan
+81.45.476.0271
Chat with us:
nvent.com/schroff

Middle East & India
Dubai, United Arab Emirates
+971.4.378.1700
Bangalore, India
+91.80.6715.2001
Istanbul, Turkey
+90.216.250.7374
Chat with us:
nvent.com/schroff

©2026 nVent. Todas las marcas y logotipos de nVent son propiedad o poseen licencia de nVent Services GmbH o sus afiliadas. Las demás marcas registradas son propiedad de sus respectivos propietarios. nVent se reserva el derecho de modificar especificaciones sin previo aviso.

Este documento es generado por el sistema.