# Guide Rail Standard Type, PC, 220 mm, 2 mm Groove Width, Red

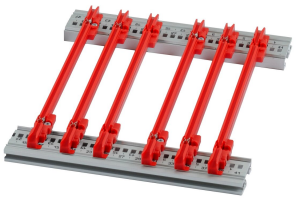

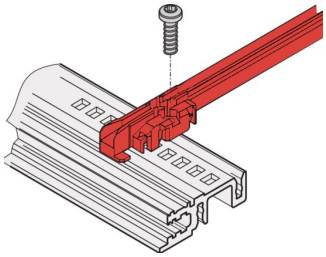

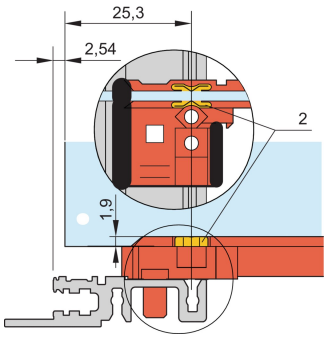

## CATALOG NUMBER

**64568-002**

New generation of accessory type guide rails for PCBs or plug-in units. Forms a reliable interface between the subrack mechanics and the sub-assemblies.

## FEATURES

- NEW generation Standard type plastic guide rails for reliable retention of PCBs or plug-in units
- Significantly increased stability, due to a optimized design and high quality material (PC)
- Improved fire safety properties, fulfills EN 45545-2 requirement sets R22, R23 and R24 with HL3
- “Halogen-Free”, according to IEC 61249-2-21
- Can be clipped into horizontal rails (Al extrusion) or into 1.5 mm thick plates
- Can be bolted to the horizontal rails Type H and R for higher shock and vibration requirements
- Optional ESD clip for an conductive contact between PCB and horizontal rail available
- Storage temperature: from -40 °C ... 130 °C

RoHS COMPLIANT

## PRODUCT ATTRIBUTES

| |
|---|
| Board Depth: 220mm |
| Groove Width: 2 |
| Color: Red |
| Material: Fiber-Reinforced Plastic |
| Package Quantity: 1 |
| Complies With: EN 45545-2 |
| Product Family: EuropacPRO; RatiopacPRO; RatiopacPRO AIR; CompacPRO; PropacPRO; MultipacPRO; Inpac |
| Product Type: Guide Rail |

Type: Standard

Works With: Subracks; Cases; 19" Chassis; Systems

*The price shown is the per piece price and does not include VAT. Depending on local conditions, packaging and freight charges might not be included. Where these charges should be part of the total price, they are included in the quote. The price given is a non-binding recommended retail price (RRP), which is the nVent list price. The final sales prices of local distributors may vary. Quotations requested or generated on SCHROFF.nVent.com are only valid for commercial customers (B2B). The lead time displayed above is an estimate for this item to be dispatched from an nVent Schroff facility. Transit delivery times are not included in this estimate, as transit time may vary, depending on delivery address, parcel dimensions, and other factors. Cut-outs and modifications placed in non-recommended areas ("collision detected") for configured products may be subject to additional engineering and/or design costs, which may increase initially quoted prices.

## ADDITIONAL PRODUCT DETAILS

Please take into consideration that deliveries may be carried out in the stated SPQs (SPQ, e.g. 5 pieces, 10 pieces, 50 pieces, etc.). Differing order quantities (e.g. 2 pieces) may be changed to the next possible delivery quantity = Standard Pack Quantity.

## WARNING

nVent products shall be installed and used only as indicated in nVent's product instruction sheets and training materials. Instruction sheets are available at www.nvent.com and from your nVent customer service representative. Improper installation, misuse, misapplication or other failure to completely follow nVent's instructions and warnings may cause product malfunction, property damage, serious bodily injury and death and/or void your warranty.


**North America**
All locations
+1.763.422.2661
Chat with us:
nvent.com/schroff

**Europe**
Straubenhardt, Germany
+49.7082.794.0
Betschdorf, France
+33.3.88.90.64.90
Warsaw, Poland
+48.22.209.98.35
Assago, Italy
+39.02.932.7141
Chat with us:
nvent.com/schroff

**Asia**
Shanghai, China
+86.21.2412.6943
Qingdao, China
+86.532.8771.6101
Singapore
+65.6768.5800
Shin-Yokohama, Japan
+81.45.476.0271
Chat with us:
nvent.com/schroff

**Middle East & India**
Dubai, United Arab Emirates
+971.4.378.1700
Bangalore, India
+91.80.6715.2001
Istanbul, Turkey
+90.216.250.7374
Chat with us:
nvent.com/schroff



©2026 nVent. All nVent marks and logos are owned or licensed by nVent Services GmbH or its affiliates. All other trademarks are the property of their respective owners. nVent reserves the right to change specifications without notice.

This document is system-generated.