EuropacPRO 19" Subrack Kit for Backplane, Heavy, Shielded, 6 U, 355 mm

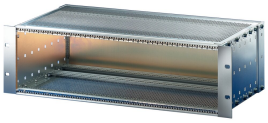

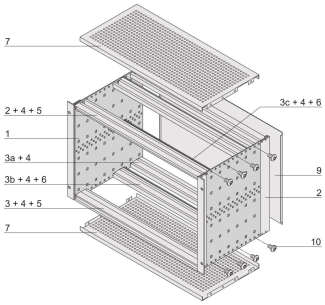

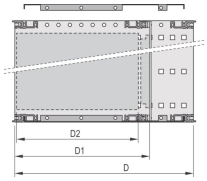

CATALOG NUMBER

24563-474

EMC Shielded subrack for backplane mounting, heavy version with tox welded side panels.

FEATURES

- Subrack with side panel type H ("Heavy"), 19" bracket is firmly fixed to side panel (tox-cold welded)
- Modifications such as cutouts, different finishes or dimensions available
- Supplied as space-saving flat-pack
- Aluminum construction
- Horizontal rail type "Heavy"
- Rear horizontal rail for backplane mounting with insulation strip
- EMC of approximately 40 dB at 1 GHz, 30 dB at 2 GHz, assuming that the front is covered with shielded front panels, testing in accordance with VG 95373 part 15
- Internal and external dimensions in accordance with: IEC 60297-3-100, -101, IEEE 1101.1
- Shock and vibration tested to the German "Bahn" standards BN 411002, BN 411003
- IP 20, in accordance with IEC 60529

RoHS COMPLIANT

PRODUCT ATTRIBUTES

- Rack Height: 6U
- Depth (D): 355mm
- Package Quantity: 1
- For Mounting: Backplane
- Board Depth: 160mm; 220mm; 280mm
- Gasket Type: Textile EMC

Shock and Vibration Tolerance: 5g (force)

Handle Included: No

Mounting: Rack

Complies With: IEC 60297-3-103

EMC Shielding: Yes

Finish: Anodized; Passivated

Material: Aluminum

Product Type: Subrack/Chassis

Rack Width: 84HP

Static Load: 15kg

Net Weight: 4.425kg

*The price shown is the per piece price and does not include VAT. Depending on local conditions, packaging and freight charges might not be included. Where these charges should be part of the total price, they are included in the quote. The price given is a non-binding recommended retail price (RRP), which is the nVent list price. The final sales prices of local distributors may vary. Quotations requested or generated on SCHROFF.nVent.com are only valid for commercial customers (B2B). The lead time displayed above is an estimate for this item to be dispatched from an nVent Schroff facility. Transit delivery times are not included in this estimate, as transit time may vary, depending on delivery address, parcel dimensions, and other factors. Cut-outs and modifications placed in non-recommended areas ("collision detected") for configured products may be subject to additional engineering and/or design costs, which may increase initially quoted prices.

ADDITIONAL PRODUCT DETAILS

Individual configuration: broad range of variants in height, width and depth; guide rails for a wide variety of applications; interior options; accessories and mounting material.

DIAGRAMS

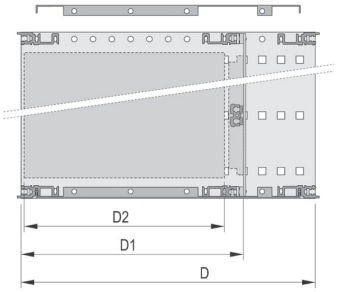

WARNING

nVent products shall be installed and used only as indicated in nVent's product instruction sheets and training materials. Instruction sheets are available at www.nvent.com and from your nVent customer service representative. Improper installation, misuse, misapplication or other failure to completely follow nVent's instructions and warnings may cause product malfunction, property damage, serious bodily injury and death and/or void your warranty.

North America
All locations
+1.763.422.2661
Chat with us:
nvent.com/schroff

Europe
Straubenhardt, Germany
+49.7082.794.0
Betschdorf, France
+33.3.88.90.64.90
Warsaw, Poland
+48.22.209.98.35
Assago, Italy
+39.02.932.7141
Chat with us:
nvent.com/schroff

Asia
Shanghai, China
+86.21.2412.6943
Qingdao, China
+86.532.8771.6101
Singapore
+65.6768.5800
Shin-Yokohama, Japan
+81.45.476.0271
Chat with us:
nvent.com/schroff

Middle East & India
Dubai, United Arab Emirates
+971.4.378.1700
Bangalore, India
+91.80.6715.2001
Istanbul, Turkey
+90.216.250.7374
Chat with us:
nvent.com/schroff

©2026 nVent. All nVent marks and logos are owned or licensed by nVent Services GmbH or its affiliates. All other trademarks are the property of their respective owners. nVent reserves the right to change specifications without notice.

This document is system-generated.