Front Panel, U-profile, Refrofit Shielding, 6 U, 42 HP, 2.5 mm, Al, Front Anodized, Rear Conductive

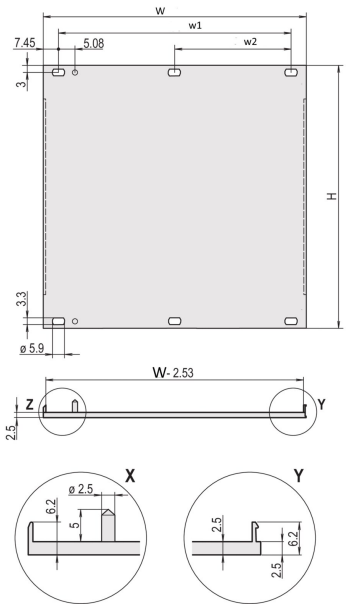

CATALOG NUMBER

20848-139

U-profile front panel for textile EMC gasket.

FEATURES

U-profile, front panel, Al, 2.5 mm, front anodized, rear conductive

For EMC textile gasket

RoHS COMPLIANT

PRODUCT ATTRIBUTES

Rack Height: 6U

Rack Width: 42HP

Package Quantity: 1

Accessory Type: Front panel

Mounting: Screw-on Front

Gasket Type: Textile EMC

Front Finish: Anodized

Rear Finish: Conductive

Treated Edges: No

Complies With: IEC 60297-3-101; IEEE 1101.1/10

Depth (D): 2.5mm

Design Feature: Alignment pin

EMC Shielding: No (Retrofittable)

Finish: Anodized; Passivated

Height (H): 261.8mm

Material: Aluminum

Product Type: Front Panel

Type: Front Panel without Handle

Width (W): 213mm

Gross Weight: 0.417kg

*The price shown is the per piece price and does not include VAT. Depending on local conditions, packaging and freight charges might not be included. Where these charges should be part of the total price, they are included in the quote. The price given is a non-binding recommended retail price (RRP), which is the nVent list price. The final sales prices of local distributors may vary. Quotations requested or generated on SCHROFF.nVent.com are only valid for commercial customers (B2B). The lead time displayed above is an estimate for this item to be dispatched from an nVent Schroff facility. Transit delivery times are not included in this estimate, as transit time may vary, depending on delivery address, parcel dimensions, and other factors. Cut-outs and modifications placed in non-recommended areas ("collision detected") for configured products may be subject to additional engineering and/or design costs, which may increase initially quoted prices.

ADDITIONAL PRODUCT DETAILS

Please order fixing material (sleeves, collar screws) separately.

14 ... 84 HP: multi-part U-profile (front panel with crimped profiles).

Differences in finish between 2 ... 12 HP and 14 ... 84 HP.

2 ... 12 HP: one-part U-profile

Please order textile EMC gasket separately.

Standard pack quantity: 2 to 28HP: 5 pieces, 42 to 84 HP: 1 piece, supplied in standard pack quantities (SPQ) only.

DIAGRAMS

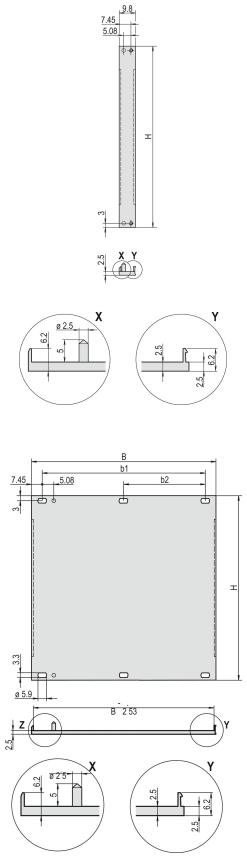

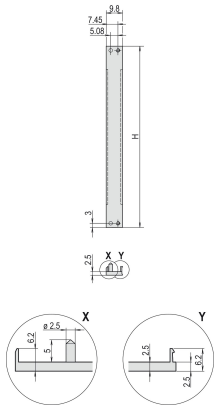

WARNING

nVent products shall be installed and used only as indicated in nVent's product instruction sheets and training materials. Instruction sheets are available at www.nvent.com and from your nVent customer service representative. Improper installation, misuse, misapplication or other failure to completely follow nVent's instructions and warnings may cause product malfunction, property damage, serious bodily injury and death and/or void your warranty.

North America
All locations
+1.763.422.2661
Chat with us:
nvent.com/schroff

Europe
Straubenhardt, Germany
+49.7082.794.0
Betschdorf, France
+33.3.88.90.64.90
Warsaw, Poland
+48.22.209.98.35
Assago, Italy
+39.02.932.7141
Chat with us:
nvent.com/schroff

Asia
Shanghai, China
+86.21.2412.6943
Qingdao, China
+86.532.8771.6101
Singapore
+65.6768.5800
Shin-Yokohama, Japan
+81.45.476.0271
Chat with us:
nvent.com/schroff

Middle East & India
Dubai, United Arab Emirates
+971.4.378.1700
Bangalore, India
+91.80.6715.2001
Istanbul, Turkey
+90.216.250.7374
Chat with us:
nvent.com/schroff

©2026 nVent. All nVent marks and logos are owned or licensed by nVent Services GmbH or its affiliates. All other trademarks are the property of their respective owners. nVent reserves the right to change specifications without notice.

This document is system-generated.