EuropacPRO Mounting Plate for Use With Cover Plate, 63 HP, 220 mm Board Length

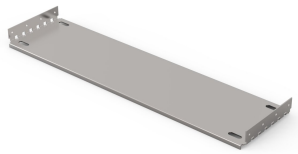

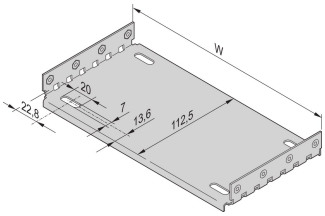

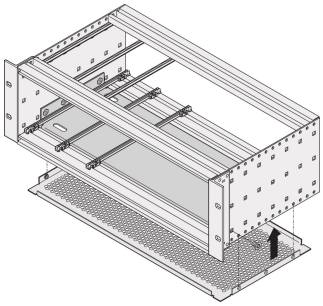

Material	HP	W	D
34563001	28	146,87	112,50
34563009	28	146,87	172,50
34563002	42	217,99	112,50
34563014	42	217,99	172,50
34563003	63	324,67	112,50
34563019	63	324,67	172,50
34563004	84	431,35	112,50
34563024	84	431,35	172,50
34563026	84	431,35	232,50
34563028	84	431,35	292,50
34563042	84	431,35	352,50
34563044	84	431,35	412,50

CATALOG NUMBER

34563-019

Mounting plate for use with cover plates for installation and fixing of heavy components. Full width mounting plates (as wide as the subrack or the system case) are fixed to the side panels. The partial width mounting plates are fixed to the side panel and horizontal rail by means of an assembly strip.

Guide rails Type 4,4” and type strengthened cannot be used in combination with a mounting plate. Top / bottom cover which will be inserted into the groove of the light (type L) horizontal rails cannot be used in combination with a mounting plate.

FEATURES

- For installation and fixing of heavy components
- Mounting plate, full width: The mounting plate is as wide as the subrack/system case and is fixed to the side panels
- A guide rail can be fitted in first and last slot position
- In addition to the mounting plate EMC cover plates can also be fitted to the subrack
- Guide rails type 4.4 and "strengthened" cannot be used

RoHS COMPLIANT

PRODUCT ATTRIBUTES

- Rack Width: 63HP
- Package Quantity: 1
- Depth: 172.5mm
- Material: Aluminum
- Product Family: EuropacPRO
- Product Type: Mounting Plate
- Width: 324.67mm
- Works With: Subracks

Gross Weight: 0.26kg

*The price shown is the per piece price and does not include VAT. Depending on local conditions, packaging and freight charges might not be included. Where these charges should be part of the total price, they are included in the quote. The price given is a non-binding recommended retail price (RRP), which is the nVent list price. The final sales prices of local distributors may vary. Quotations requested or generated on SCHROFF.nVent.com are only valid for commercial customers (B2B). The lead time displayed above is an estimate for this item to be dispatched from an nVent Schroff facility. Transit delivery times are not included in this estimate, as transit time may vary, depending on delivery address, parcel dimensions, and other factors. Cut-outs and modifications placed in non-recommended areas ("collision detected") for configured products may be subject to additional engineering and/or design costs, which may increase initially quoted prices.

WARNING

nVent products shall be installed and used only as indicated in nVent's product instruction sheets and training materials. Instruction sheets are available at www.nvent.com and from your nVent customer service representative. Improper installation, misuse, misapplication or other failure to completely follow nVent's instructions and warnings may cause product malfunction, property damage, serious bodily injury and death and/or void your warranty.

North America
All locations
+1.763.422.2661
Chat with us:
nvent.com/schroff

Europe
Straubenhardt, Germany
+49.7082.794.0
Betschdorf, France
+33.3.88.90.64.90
Warsaw, Poland
+48.22.209.98.35
Assago, Italy
+39.02.932.7141
Chat with us:
nvent.com/schroff

Asia
Shanghai, China
+86.21.2412.6943
Qingdao, China
+86.532.8771.6101
Singapore
+65.6768.5800
Shin-Yokohama, Japan
+81.45.476.0271
Chat with us:
nvent.com/schroff

Middle East & India
Dubai, United Arab Emirates
+971.4.378.1700
Bangalore, India
+91.80.6715.2001
Istanbul, Turkey
+90.216.250.7374
Chat with us:
nvent.com/schroff

©2026 nVent. All nVent marks and logos are owned or licensed by nVent Services GmbH or its affiliates. All other trademarks are the property of their respective owners. nVent reserves the right to change specifications without notice.

This document is system-generated.