Die Cast Foot

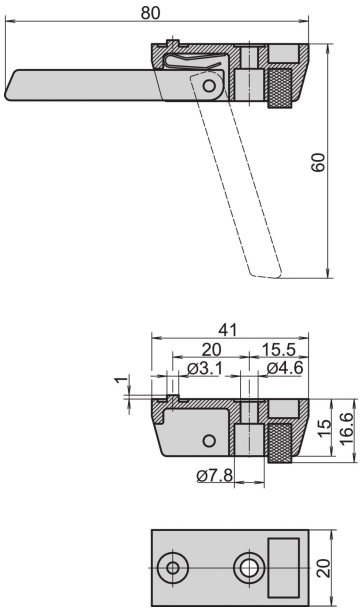

The tip-up feet from aluminum die cast material enable mounting on the bottom plate of a case. Available with or without tip-up function. Color RAL 9006 White Aluminum.

FEATURES

- Positioning of case is secured by anti-slip rubber inserts
- Can be used instead of standard feet
- Load-carrying capacity: 50 kg per foot, max case weight 40 kg
- Mounting holes are provided in bottom cover of the cases

Color: Silver
Material: Aluminum
Product Family: RatiopacPRO; RatiopacPRO AIR; CompacPRO; PropacPRO; Inpac
Product Type: Foot
Works With: Cases

RoHS COMPLIANT

SPECIFICATIONS

Catalog Number	Package Quantity	Color Code	Type
10603-001	1	RAL 9006	Foot, Without Tip-up
10603-002	1	RAL 9006	Foot, With Tip-up

ADDITIONAL PRODUCT DETAILS

Delivery is in standard pack multiples. Pricing is per individual item.

Please take into consideration that deliveries may be carried out in the stated SPQs (SPQ, e.g. 5 pieces, 10 pieces, 50 pieces, etc.). Differing order quantities (e.g. 2 pieces) may be changed to the next possible delivery quantity = Standard Pack Quantity.

WARNING

nVent products shall be installed and used only as indicated in nVent's product instruction sheets and training materials. Instruction sheets are available at www.nvent.com and from your nVent customer service representative. Improper installation, misuse, misapplication or other failure to completely follow nVent's instructions and warnings may cause product malfunction, property damage, serious bodily injury and death and/or void your warranty.

North America
All locations
+1.763.422.2661
Chat with us:
nvent.com/schroff

Europe
Straubenhardt, Germany
+49.7082.794.0
Betschdorf, France
+33.3.88.90.64.90
Warsaw, Poland
+48.22.209.98.35
Assago, Italy
+39.02.932.7141
Chat with us:
nvent.com/schroff

Asia
Shanghai, China
+86.21.2412.6943
Qingdao, China
+86.532.8771.6101
Singapore
+65.6768.5800
Shin-Yokohama, Japan
+81.45.476.0271
Chat with us:
nvent.com/schroff

Middle East & India
Dubai, United Arab Emirates
+971.4.378.1700
Bangalore, India
+91.80.6715.2001
Istanbul, Turkey
+90.216.250.7374
Chat with us:
nvent.com/schroff

©2026 nVent. All nVent marks and logos are owned or licensed by nVent Services GmbH or its affiliates. All other trademarks are the property of their respective owners. nVent reserves the right to change specifications without notice.

This document is system-generated.