# Plug-In Unit Kit for FMC With IEL Handle black, U-shaped Front Panel Shielded (Textile), 3 U, 4 HP

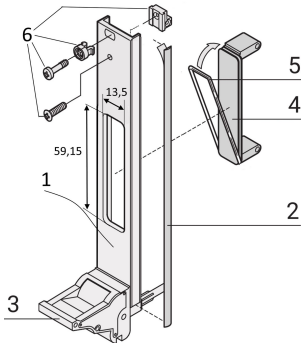


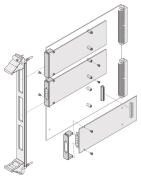

## CATALOG NUMBER

**20836-253**

The FMC bezel are in accordance with Vita 57.1 specification. Covers the cut out in the overall front panel.

## FEATURES

- In accordance with Vita 57.1 specification
- For single 69.0 x 76.5 mm or double 139.0 x 76.5 mm modules
- Al-Profile plug-in unit with IEL handle

RoHS COMPLIANT

## PRODUCT ATTRIBUTES

| |
|---|
| Rack Height: 3U |
| Package Quantity: 1 |
| Handle Type: IEL |
| Mounting: Screw-on Front |
| Gasket Type: Textile EMC |
| Front Finish: Anodized |
| Rear Finish: Conductive |
| Treated Edges: No |
| Complies With: FMC Mezzanine, Vita 57.1 |
| EMC Shielding: Yes |
| Finish: Anodized; Passivated |
| Height: 128.4mm |
| Material: Aluminum |
| Product Type: Front Panel |

Rack Width: 4HP

Type: Front Panel with Handle (PIU)

Width: 20mm

Net Weight: 0.1kg

*The price shown is the per piece price and does not include VAT. Depending on local conditions, packaging and freight charges might not be included. Where these charges should be part of the total price, they are included in the quote. The price given is a non-binding recommended retail price (RRP), which is the nVent list price. The final sales prices of local distributors may vary. Quotations requested or generated on SCHROFF.nVent.com are only valid for commercial customers (B2B). The lead time displayed above is an estimate for this item to be dispatched from an nVent Schroff facility. Transit delivery times are not included in this estimate, as transit time may vary, depending on delivery address, parcel dimensions, and other factors. Cut-outs and modifications placed in non-recommended areas ("collision detected") for configured products may be subject to additional engineering and/or design costs, which may increase initially quoted prices.

## WARNING

nVent products shall be installed and used only as indicated in nVent's product instruction sheets and training materials. Instruction sheets are available at www.nvent.com and from your nVent customer service representative. Improper installation, misuse, misapplication or other failure to completely follow nVent's instructions and warnings may cause product malfunction, property damage, serious bodily injury and death and/or void your warranty.


**North America**
All locations
+1.763.422.2661
Chat with us:
nvent.com/schroff

**Europe**
Straubenhardt, Germany
+49.7082.794.0
Betschdorf, France
+33.3.88.90.64.90
Warsaw, Poland
+48.22.209.98.35
Assago, Italy
+39.02.932.7141
Chat with us:
nvent.com/schroff

**Asia**
Shanghai, China
+86.21.2412.6943
Qingdao, China
+86.532.8771.6101
Singapore
+65.6768.5800
Shin-Yokohama, Japan
+81.45.476.0271
Chat with us:
nvent.com/schroff

**Middle East & India**
Dubai, United Arab Emirates
+971.4.378.1700
Bangalore, India
+91.80.6715.2001
Istanbul, Turkey
+90.216.250.7374
Chat with us:
nvent.com/schroff



©2026 nVent. All nVent marks and logos are owned or licensed by nVent Services GmbH or its affiliates. All other trademarks are the property of their respective owners. nVent reserves the right to change specifications without notice.

This document is system-generated.