CPCI System With ATX PSU, 4 U, 8 Slot

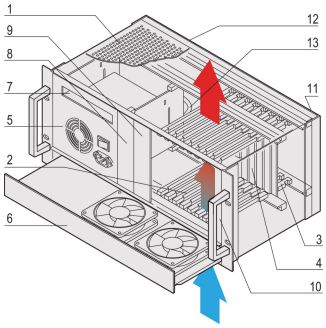

Obsolete

CATALOG NUMBER

24579-250

4 U CompactPCI System with vertical Card Cage for eight 3U Boards, eight RTM Boards and built in ATX Power Supply.

FEATURES

- In accordance with IEC 60297-3-101, -102, -103; IEEE 1101.1, 1101.10/11; backplane in accordance with PICMG 2.0 rev. 3.0
- System with vertical card cage. Board format Front: 3 U, 160 mm deep; Rear I/O: 3 U, 80 mm deep
- Backplane 8 slot, 3 U, 32 bit; system slot right; 8 HP wide CPU can be used
- Heat dissipation by 1 U hot-swap fan unit, airflow bottom to top
- ATX PSU, 300 W
- Option to mount a slimline DVD drive and hard disk

RoHS COMPLIANT

PICMG

PRODUCT ATTRIBUTES

- Product Type: System
- Number of Slots: 8
- Type: 19" Rack Mount
- Backplane Type: 3 U CompactPCI
- Data Transfer: 32-bit PCI Bus
- Power per Slot: 40W
- Input Voltage AC: 100 – 240V
- Airflow Direction: Bottom to Top
- Rack Height: 4U
- Power Supply Type: (1) ATX PSU
- Power Supply Included: Yes
- Rear I/O: Yes
- Complies With: PICMG 2.0 R3.0

Depth: 275mm

Height: 177mm

Net Weight: 11.6kg

*The price shown is the per piece price and does not include VAT. Depending on local conditions, packaging and freight charges might not be included. Where these charges should be part of the total price, they are included in the quote. The price given is a non-binding recommended retail price (RRP), which is the nVent list price. The final sales prices of local distributors may vary. Quotations requested or generated on SCHROFF.nVent.com are only valid for commercial customers (B2B). The lead time displayed above is an estimate for this item to be dispatched from an nVent Schroff facility. Transit delivery times are not included in this estimate, as transit time may vary, depending on delivery address, parcel dimensions, and other factors. Cut-outs and modifications placed in non-recommended areas ("collision detected") for configured products may be subject to additional engineering and/or design costs, which may increase initially quoted prices.

ADDITIONAL PRODUCT DETAILS

Modified systems available on request.

WARNING

nVent products shall be installed and used only as indicated in nVent's product instruction sheets and training materials. Instruction sheets are available at www.nvent.com and from your nVent customer service representative. Improper installation, misuse, misapplication or other failure to completely follow nVent's instructions and warnings may cause product malfunction, property damage, serious bodily injury and death and/or void your warranty.

North America
All locations
+1.763.422.2661
Chat with us:
nvent.com/schroff

Europe
Straubenhardt, Germany
+49.7082.794.0
Betschdorf, France
+33.3.88.90.64.90
Warsaw, Poland
+48.22.209.98.35
Assago, Italy
+39.02.932.7141
Chat with us:
nvent.com/schroff

Asia
Shanghai, China
+86.21.2412.6943
Qingdao, China
+86.532.8771.6101
Singapore
+65.6768.5800
Shin-Yokohama, Japan
+81.45.476.0271
Chat with us:
nvent.com/schroff

Middle East & India
Dubai, United Arab Emirates
+971.4.378.1700
Bangalore, India
+91.80.6715.2001
Istanbul, Turkey
+90.216.250.7374
Chat with us:
nvent.com/schroff

©2026 nVent. All nVent marks and logos are owned or licensed by nVent Services GmbH or its affiliates. All other trademarks are the property of their respective owners. nVent reserves the right to change specifications without notice.

This document is system-generated.