# Mounting Plate for 19" Case and Subrack, 28 HP, 340 mm Board Length

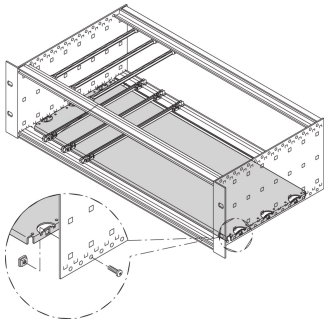

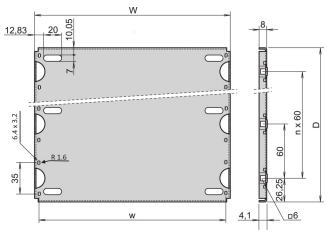


| Material | HP | W | w | D |
|---|---|---|---|---|
| 34562745 | 28 | 146,87 | 137,16 | 112,50 |
| 34562749 | 28 | 146,87 | 137,16 | 172,50 |
| 34562753 | 28 | 146,87 | 137,16 | 232,50 |
| 34562757 | 28 | 146,87 | 137,16 | 292,50 |
| 34562746 | 42 | 217,99 | 208,28 | 112,50 |
| 34562750 | 42 | 217,99 | 208,28 | 172,50 |
| 34562754 | 42 | 217,99 | 208,28 | 232,50 |
| 34562758 | 42 | 217,99 | 208,28 | 292,50 |
| 34562747 | 63 | 324,67 | 314,96 | 112,50 |
| 34562751 | 63 | 324,67 | 314,96 | 172,50 |
| 34562755 | 63 | 324,67 | 314,96 | 232,50 |
| 34562759 | 63 | 324,67 | 314,96 | 292,50 |
| 34562748 | 84 | 431,35 | 421,64 | 112,50 |
| 34562752 | 84 | 431,35 | 421,64 | 172,50 |
| 34562756 | 84 | 431,35 | 421,64 | 232,50 |
| 34562760 | 84 | 431,35 | 421,64 | 292,50 |
| 34562870 | 84 | 431,35 | 421,64 | 352,50 |
| 34562871 | 84 | 431,35 | 421,64 | 412,50 |

## CATALOG NUMBER

### 34562-757

Mounting plate for heavy components or proprietary electronic assemblies. Suitable for RatiopacPRO/-AIR, CompacPRO and EuropacPRO.

Guide rails Type 4,4” and type strengthened cannot be used in combination with a mounting plate. Top / bottom cover which will be inserted into the groove of the light (type L) horizontal rails cannot be used in combination with a mounting plate.

## FEATURES

- For assembly of heavy components
- Mounting plate, full width: The mounting plate is as wide as the subrack/system case and is fixed to the side panels
- Mounting plate, partial width: The partial width mounting plate fixed to the side panel by means of an assembly strip
- The chassis plate can´t be combined with EMC top- / bottom covers

RoHS COMPLIANT

## PRODUCT ATTRIBUTES

- Rack Width: 28HP
- Package Quantity: 1
- Depth: 292.2mm
- Material: Aluminum
- Product Family: EuropacPRO; RatiopacPRO; CompacPRO
- Product Type: Mounting Plate
- Width: 146.88mm
- Works With: Subracks
- Net Weight: 0.18kg

*The price shown is the per piece price and does not include VAT. Depending on local conditions, packaging and freight charges might not be included. Where these charges should be part of the total price, they are included in the quote. The price given is a non-binding recommended retail price (RRP), which is the nVent list price. The final sales prices of local distributors may vary. Quotations requested or generated on

SCHROFF.nVent.com are only valid for commercial customers (B2B). The lead time displayed above is an estimate for this item to be dispatched from an nVent Schroff facility. Transit delivery times are not included in this estimate, as transit time may vary, depending on delivery address, parcel dimensions, and other factors. Cut-outs and modifications placed in non-recommended areas ("collision detected") for configured products may be subject to additional engineering and/or design costs, which may increase initially quoted prices.

## ADDITIONAL PRODUCT DETAILS

Please order assembly kit for mounting plate separately.

Other versions on request.

Fixing strips required for partial width, please order separately.

## WARNING

nVent products shall be installed and used only as indicated in nVent's product instruction sheets and training materials. Instruction sheets are available at www.nvent.com and from your nVent customer service representative. Improper installation, misuse, misapplication or other failure to completely follow nVent's instructions and warnings may cause product malfunction, property damage, serious bodily injury and death and/or void your warranty.


**North America**
All locations
+1.763.422.2661
Chat with us:
nvent.com/schroff

**Europe**
Straubenhardt, Germany
+49.7082.794.0
Betschdorf, France
+33.3.88.90.64.90
Warsaw, Poland
+48.22.209.98.35
Assago, Italy
+39.02.932.7141
Chat with us:
nvent.com/schroff

**Asia**
Shanghai, China
+86.21.2412.6943
Qingdao, China
+86.532.8771.6101
Singapore
+65.6768.5800
Shin-Yokohama, Japan
+81.45.476.0271
Chat with us:
nvent.com/schroff

**Middle East & India**
Dubai, United Arab Emirates
+971.4.378.1700
Bangalore, India
+91.80.6715.2001
Istanbul, Turkey
+90.216.250.7374
Chat with us:
nvent.com/schroff



©2026 nVent. All nVent marks and logos are owned or licensed by nVent Services GmbH or its affiliates. All other trademarks are the property of their respective owners. nVent reserves the right to change specifications without notice.

This document is system-generated.