Front Panel EMC Stainless Steel Shielding Kit, for U-Shaped front panels, 5 U, 10 Pieces

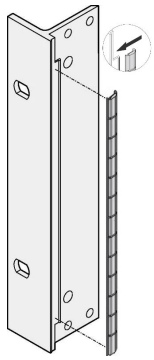

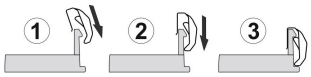

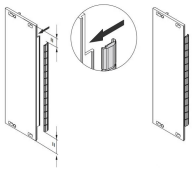

CATALOG NUMBER

21102-117

The stainless EMC gaskets are inserted into a slot on the right hand side of the U-shaped front panels.

The gasket will be clipt onto the right front panel bracket, the 19" bracket or rear profile of the subrack

FEATURES

The stainless steel EMC-gasket for SCHROFF U-shaped front panels, offers excellent performance in shielding effectiveness and an enormous temperature range from -200 to +160°C.

Easy mounting by clipping the gasket onto the right front panel bracket, the 19" bracket or rear profile of the subrack

Temperature range from -200 to +160°C.

PRODUCT ATTRIBUTES

Rack Height: 5U

Package Quantity: 10

Material: Stainless Steel

Product Family: EuropacPRO; RatiopacPRO; RatiopacPRO AIR; PropacPRO; Frame Type Plug-In Unit

Product Type: Shielding Kit

Rack Width: 10HP

Works With: Subracks; Cases; Front Panels

*The price shown is the per piece price and does not include VAT. Depending on local conditions, packaging and freight charges might not be included. Where these charges should be part of the total price, they are included in the quote. The price given is a non-binding recommended retail price (RRP), which is the nVent list price. The final sales prices of local distributors may vary. Quotations requested or generated on SCHROFF.nVent.com are only valid for commercial customers (B2B). The lead time displayed above is an estimate for this item to be dispatched from an nVent Schroff facility. Transit delivery times are not included in this estimate, as transit time may vary, depending on delivery address, parcel dimensions, and other factors. Cut-outs and modifications placed in non-recommended areas ("collision detected") for configured products may be subject to additional engineering and/or design costs, which may increase initially quoted prices.

ADDITIONAL PRODUCT DETAILS

EMC gaskets (stainless) are required for shielding the front panels.

DIAGRAMS

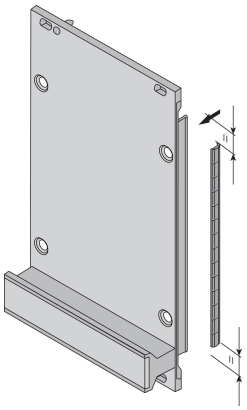

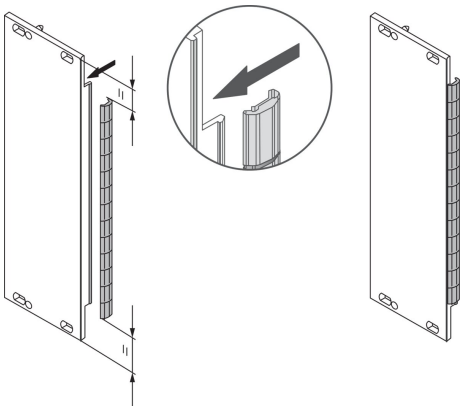

WARNING

nVent products shall be installed and used only as indicated in nVent's product instruction sheets and training materials. Instruction sheets are available at www.nvent.com and from your nVent customer service representative. Improper installation, misuse, misapplication or other failure to completely follow nVent's instructions and warnings may cause product malfunction, property damage, serious bodily injury and death and/or void your warranty.

North America
All locations
+1.763.422.2661
Chat with us:
nvent.com/schroff

Europe
Straubenhardt, Germany
+49.7082.794.0
Betschdorf, France
+33.3.88.90.64.90
Warsaw, Poland
+48.22.209.98.35
Assago, Italy
+39.02.932.7141
Chat with us:
nvent.com/schroff

Asia
Shanghai, China
+86.21.2412.6943
Qingdao, China
+86.532.8771.6101
Singapore
+65.6768.5800
Shin-Yokohama, Japan
+81.45.476.0271
Chat with us:
nvent.com/schroff

Middle East & India
Dubai, United Arab Emirates
+971.4.378.1700
Bangalore, India
+91.80.6715.2001
Istanbul, Turkey
+90.216.250.7374
Chat with us:
nvent.com/schroff

©2026 nVent. All nVent marks and logos are owned or licensed by nVent Services GmbH or its affiliates. All other trademarks are the property of their respective owners. nVent reserves the right to change specifications without notice.

This document is system-generated.