Panhead Screw, Pozidriv, Cross Recess M2.5 x 8 mm, Steel Nickel Plated; 100 pieces

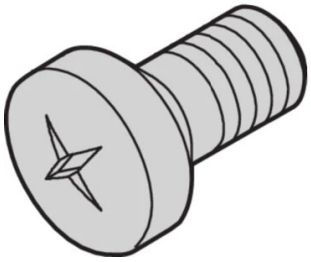

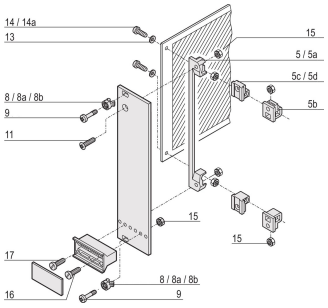

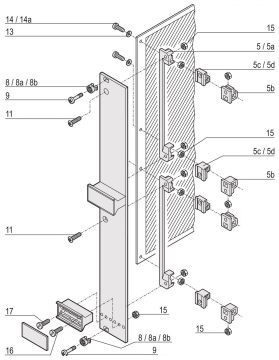

CATALOG NUMBER

21101-069

Good compromise between profile height and bearing area. Better load distribution than round heads. Compatible with automated assembly.

FEATURES

Phillips screw offers a high level of torque to achieve quick and easy installation. The Phillips screw drive is more stable with the help of four contact points and better performing with screwdrivers. But unlike other kinds of screw drives, the Phillips drive is designed to cam out in which screw drive slips out of the cross head once the torque is needed to drive the screw exceeds a certain amount to avoid over tightening.

Pozidriv has a set of 45° radial indentations from the main cross recess leading to 4 additional contact points and greater stabilization to provide a greater contact surface. As a result, it decrease cam-out and wear, which allows greater torque to be applied.

RoHS COMPLIANT

PRODUCT ATTRIBUTES

Length: 8mm

Finish: Nickel Plated

Package Quantity: 100

Thread Size: M2.5

Material: Steel

Product Family: Frame Type Plug-In Unit

Product Type: Screw

Type: Panhead Screw

Works With: Backplanes; Test Adapters

Torque: 0.3N·m

Net Weight: 0.048kg

Thread Length: 8mm

*The price shown is the per piece price and does not include VAT. Depending on local conditions, packaging and freight charges might not be included. Where these charges should be part of the total price, they are included in the quote. The price given is a non-binding recommended retail price (RRP), which is the nVent list price. The final sales prices of local distributors may vary. Quotations requested or generated on SCHROFF.nVent.com are only valid for commercial customers (B2B). The lead time displayed above is an estimate for this item to be dispatched from an nVent Schroff facility. Transit delivery times are not included in this estimate, as transit time may vary, depending on delivery address, parcel dimensions, and other factors. Cut-outs and modifications placed in non-recommended areas ("collision detected") for configured products may be subject to additional engineering and/or design costs, which may increase initially quoted prices.

WARNING

nVent products shall be installed and used only as indicated in nVent's product instruction sheets and training materials. Instruction sheets are available at www.nvent.com and from your nVent customer service representative. Improper installation, misuse, misapplication or other failure to completely follow nVent's instructions and warnings may cause product malfunction, property damage, serious bodily injury and death and/or void your warranty.

North America
All locations
+1.763.422.2661
Chat with us:
nvent.com/schroff

Europe
Straubenhardt, Germany
+49.7082.794.0
Betschdorf, France
+33.3.88.90.64.90
Warsaw, Poland
+48.22.209.98.35
Assago, Italy
+39.02.932.7141
Chat with us:
nvent.com/schroff

Asia
Shanghai, China
+86.21.2412.6943
Qingdao, China
+86.532.8771.6101
Singapore
+65.6768.5800
Shin-Yokohama, Japan
+81.45.476.0271
Chat with us:
nvent.com/schroff

Middle East & India
Dubai, United Arab Emirates
+971.4.378.1700
Bangalore, India
+91.80.6715.2001
Istanbul, Turkey
+90.216.250.7374
Chat with us:
nvent.com/schroff

©2026 nVent. All nVent marks and logos are owned or licensed by nVent Services GmbH or its affiliates. All other trademarks are the property of their respective owners. nVent reserves the right to change specifications without notice.

This document is system-generated.