nVent ERICO Hammerlock Ground Clamp

The nVent ERICO Hammerlock irreversible mechanical connection connects the grounding conductor to the ground rod. Machined from highly conductive copper, the state-of-the-art Hammerlock provides a low resistance connection designed to withstand ground fault currents and lightning transients. The connector's mechanically rugged design will help ensure that the highest level of performance is maintained for many years after the connection has been buried in the harsh underground environment.

Installing the Hammerlock is as easy as swinging a hammer and requires no special tools or training. The Hammerlock can be installed three to five times faster than an acorn clamp and provides a high-quality grounding connection that is easy to use and withstands 100% of the current carrying capacity of the conductor.

FEATURES

- Irreversible connection with excellent mechanical strength
- Fast and simple installation requires only a hammer
- No special training required
- Low resistance connection
- Provides a visual indication of completed connection
- Allows for "T" or pass-through connections
- Suitable for Copperweld® steel conductors
- Part of the Color Smart Ground Rod System

Ground Rod Type: Copper-bonded
Material: Copper

SPECIFICATIONS

Catalog Number	Color	Ground Rod Diameter, Nominal	Ground Rod Diameter, Actual (Ø)	Conductor Size	Number of Conductors	Certifications
EHL12FC1K	Green	1/2"	12.7 mm	#6 Solid - #4 Solid, 16 mm² Stranded	1	UL, cUL

Catalog Number	Color	Ground Rod Diameter,Nominal	Ground Rod Diameter, Actual (Ø)	Conductor Size	Number of Conductors	Certificat ions
EHL12FC1K1K	Green	1/2"	12.7 mm	#6 Solid - #4 Solid, 16 mm² Stranded	2	
EHL12FC1V	Green	1/2"	12.7 mm	#4 Stranded - #2 Stranded, 25 mm² Stranded	1	cUL, UL
EHL12FC2G	Green	1/2"	12.7 mm	1/0 Stranded - 2/0 Stranded	1	UL, cUL
EHL34C1K	Yellow	3/4"	17.3 mm	#6 Solid - #4 Solid, 16 mm² Stranded	1	cUL, UL
EHL34C1V	Yellow	3/4"	17.3 mm	#4 Stranded - #2 Stranded, 25 mm² Stranded	1	UL, cUL
EHL34C2G	Yellow	3/4"	17.3 mm	1/0 Stranded - 2/0 Stranded, #2 Solid	1	cUL, UL
EHL58C1K	Silver	5/8"	14.2 mm	#6 Solid - #4 Solid, 16 mm² Stranded, #2 Solid	1	cUL, RUS, UL
EHL58C1K1K	Silver	5/8"	14.2 mm	#6 Solid - #4 Solid, 16 mm² Stranded	2	UL, cUL
EHL58C1V	Silver	5/8"	14.2 mm	#4 Stranded - #2 Stranded, 25 mm² Stranded	1	cUL, UL
EHL58C2G	Silver	5/8"	14.2 mm	1/0 Stranded - 2/0 Stranded	1	cUL, UL

DIAGRAMS

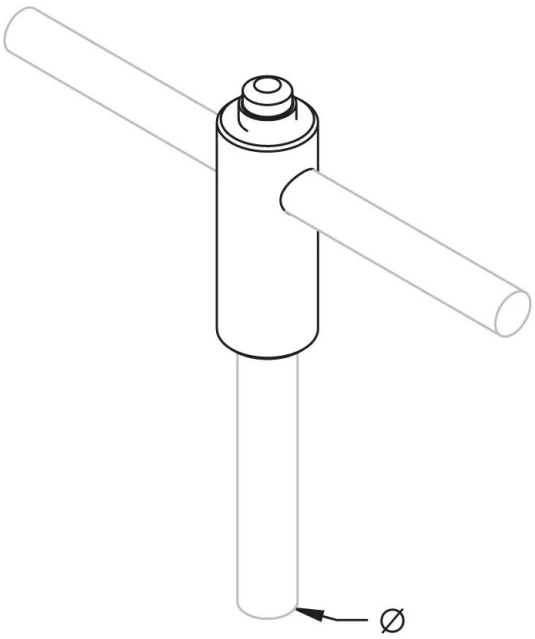

WARNING

nVent products shall be installed and used only as indicated in nVent's product instruction sheets and training materials. Instruction sheets are available at www.nvent.com and from your nVent customer service representative. Improper installation, misuse, misapplication or other failure to completely follow nVent's instructions and warnings may cause product malfunction, property damage, serious bodily injury and death and/or void your warranty.

⚠ WARNING: This product can expose you to chemicals including lead, which is known to the State of California to cause cancer and birth defects or other reproductive harm. For more information go to www.P65Warnings.ca.gov.

North America
+1.800.753.9221
Option 1 – Customer Care
Option 2 – Technical Support

Europe
Netherlands:
+31 800-0200135
France:
+33 800 901 793

Europe
Germany:
800 1890272
Other Countries:
+31 13 5835404

APAC
Shanghai:
+ 86 21 2412 1618/19
Sydney:
+61 2 9751 8500

©2026 nVent. All nVent marks and logos are owned or licensed by nVent Services GmbH or its affiliates. All other trademarks are the property of their respective owners. nVent reserves the right to change specifications without notice.

This document is system-generated.