We connect and protect

Front Panel, Shielded, Bottom Hinged

U-profile front panel bottom hinged for textile gasket.

FEATURES

- U-profile front panel can be unhinged at 135° (not RatiopacPRO) opening angle
- Enables mounting on horizontal rails
- Shielded, U front panel with textile EMC gasket
- Suitable for subracks (EuropacPRO) and cases (RatiopacPRO, PropacPRO, CompacPRO)

Depth (D): 2.5mm
Material: Aluminum
Finish: Anodized; Passivated
Accessory Type: Front panel
Product Type: Front Panel
Type: Front Panel without Handle

RoHS COMPLIANT

SPECIFICATIONS

Table 1/2

Catalog Number	Rack Height	Rack Width	Package Quantity	Mounting	Gasket Type	Front Finish
20848-599	3U	42HP	1	Hinged, Bottom	Textile EMC	Anodized
20848-604	6U	84HP	1	Hinged, Bottom	Textile EMC	Anodized
20848-608	3U	28HP	1	Hinged, Bottom	Textile EMC	Anodized
20848-605	4U	42HP	1	Hinged, Bottom	Textile EMC	Anodized
20848-602	6U	42HP	1	Hinged, Bottom	Textile EMC	Anodized
20848-601	3U	84HP	1	Hinged, Bottom	Textile EMC	Anodized
20848-607	4U	84HP	1	Hinged, Bottom	Textile EMC	Anodized
20848-606	4U	63HP	1	Hinged, Bottom	Textile EMC	Anodized
20848-600	3U	63HP	1	Hinged, Bottom	Textile EMC	Anodized
20848-696	6U	28HP	1	Hinged, Bottom	Textile EMC	Anodized

Catalog Number	Rack Height	Rack Width	Package Quantity	Mounting	Gasket Type	Front Finish
20848-603	6U	63HP	1	Hinged, Bottom	Textile EMC	Anodized

Table 2/2

Catalog Number	Rear Finish	Treated Edges	Complies With	EMC Shielding	Height (H)	Width (W)
20848-599	Conductive	No	IEC 60297-3-101, IEEE 1101.1/10	No (Retrofittable)	128.4mm	213mm
20848-604	Conductive	No	IEC 60297-3-101, IEEE 1101.1/10	No (Retrofittable)	261.8mm	426.4mm
20848-608	Conductive	No	IEC 60297-3-101, IEEE 1101.1/10	No (Retrofittable)	128.4mm	141.9mm
20848-605	Conductive	No	IEC 60297-3-101, IEEE 1101.1/10	No (Retrofittable)	172.9mm	213mm
20848-602	Conductive	No	IEC 60297-3-101, IEEE 1101.1/10	No (Retrofittable)	261.8mm	213mm
20848-601	Conductive	No	IEC 60297-3-101, IEEE 1101.1/10	No (Retrofittable)	128.4mm	426.4mm
20848-607	Conductive	No	IEC 60297-3-101, IEEE 1101.1/10	No (Retrofittable)	172.9mm	426.4mm
20848-606	Conductive	No	IEC 60297-3-101, IEEE 1101.1/10	No (Retrofittable)	172.9mm	319.7mm
20848-600	Conductive	No	IEC 60297-3-101, IEEE 1101.1/10	No (Retrofittable)	128.4mm	319.7mm
20848-696	Conductive	No	IEC 60297-3-101, IEEE 1101.1/10	No (Retrofittable)	261.8mm	141.9mm
20848-603	Conductive	No	IEC 60297-3-101, IEEE 1101.1/10	No (Retrofittable)	261.8mm	319.7mm

ADDITIONAL PRODUCT DETAILS

Front panel can be removed in opened position (> 135°).

DIAGRAMS

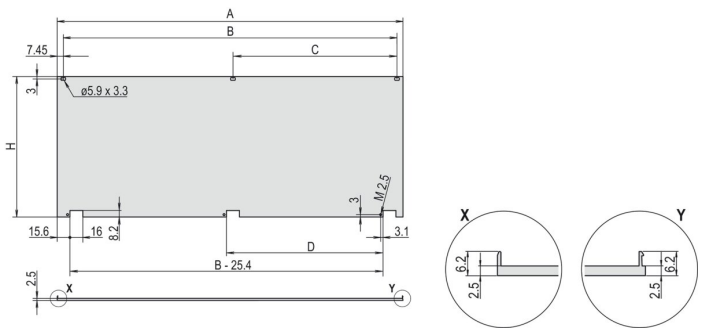

WARNING

nVent products shall be installed and used only as indicated in nVent's product instruction sheets and training materials. Instruction sheets are available at www.nvent.com and from your nVent customer service representative. Improper installation, misuse, misapplication or other failure to completely follow nVent's instructions and warnings may cause product malfunction, property damage, serious bodily injury and death and/or void your warranty.

North America
All locations
+1.763.422.2661
Chat with us:
nvent.com/schroff

Europe
Straubenhardt, Germany
+49.7082.794.0
Betschdorf, France
+33.3.88.90.64.90
Warsaw, Poland
+48.22.209.98.35
Assago, Italy
+39.02.932.7141
Chat with us:
nvent.com/schroff

Asia
Shanghai, China
+86.21.2412.6943
Qingdao, China
+86.532.8771.6101
Singapore
+65.6768.5800
Shin-Yokohama, Japan
+81.45.476.0271
Chat with us:
nvent.com/schroff

Middle East & India
Dubai, United Arab Emirates
+971.4.378.1700
Bangalore, India
+91.80.6715.2001
Istanbul, Turkey
+90.216.250.7374
Chat with us:
nvent.com/schroff

Our powerful portfolio of brands:

CADDY ERICO HOFFMAN ILSCO SCHROFF TRACHTE

©2026 nVent. All nVent marks and logos are owned or licensed by nVent Services GmbH or its affiliates. All other trademarks are the property of their respective owners. nVent reserves the right to change specifications without notice.

This document is system-generated.