RatiopacPRO, Complete Case, Desktop, Shielded, Front Trim, 3 U, 42 HP, 315 mm

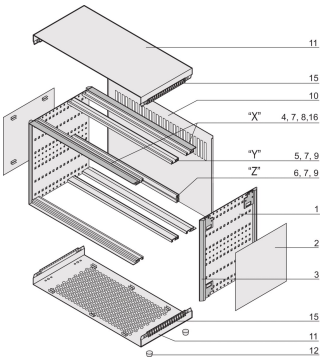

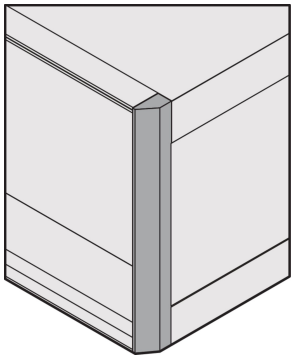

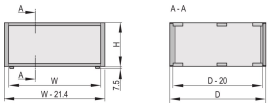

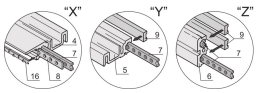

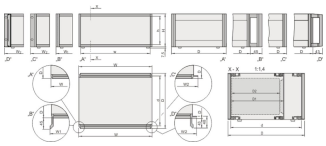

CATALOG NUMBER

24572-052

The nVent SCHROFF RatiopacPRO case with EMC shielding, provides electronics protection for 19" and individual electronic assemblies. This flexible and robust case is simple to convert from desktop to a 19" rack mount case and includes four different style options. This version of the case provides a sleek design for desktop applications.

FEATURES

- Desktop enclosure with pre-configured components, in accordance to IEC 60297-3-101; prepared for 19" components, e.g. plug-in units and euroboards
- Shielded
- Version with cover strips
- Ventilation slit in base plate
- Rear panel perforated
- Conforms with DIN EN 62368-1

PRODUCT ATTRIBUTES

- Rack Height: 3U
- Rack Width: 42HP
- Depth: 315.5mm
- Package Quantity: 1
- Usable Height: 112.3mm
- Usable Width: 219mm
- Front Frame Construction: Side Trim; Horizontal Rails
- Cooling Option: No
- Complies With: IEC 60297-3-101; IEC 60297-3-102; IEEE 1101.1; IEEE 1101.10; IEEE 1101.11

EMC Shielding: Yes

Finish: Passivated; Powder Coated

Height: 132.6mm

Material: Aluminum

Product Family: RatiopacPRO

Product Type: Case

Protection Rating: IP20

Static Load: 25kg

Type: Case for 19" Components

Width: 235.5mm

Net Weight: 2.36kg

*The price shown is the per piece price and does not include VAT. Depending on local conditions, packaging and freight charges might not be included. Where these charges should be part of the total price, they are included in the quote. The price given is a non-binding recommended retail price (RRP), which is the nVent list price. The final sales prices of local distributors may vary. Quotations requested or generated on SCHROFF.nVent.com are only valid for commercial customers (B2B). The lead time displayed above is an estimate for this item to be dispatched from an nVent Schroff facility. Transit delivery times are not included in this estimate, as transit time may vary, depending on delivery address, parcel dimensions, and other factors. Cut-outs and modifications placed in non-recommended areas ("collision detected") for configured products may be subject to additional engineering and/or design costs, which may increase initially quoted prices.

ADDITIONAL PRODUCT DETAILS

Modifications (special colours or sizes).

Custom solutions (cut-outs in top cover, base plate or side panels).

Assembly service from 1 piece.

WARNING

nVent products shall be installed and used only as indicated in nVent's product instruction sheets and training materials. Instruction sheets are available at www.nvent.com and from your nVent customer service representative. Improper installation, misuse, misapplication or other failure to completely follow nVent's instructions and warnings may cause product malfunction, property damage, serious bodily injury and death and/or void your warranty.

North America
All locations
+1.763.422.2661
Chat with us:
nvent.com/schroff

Europe
Straubenhardt, Germany
+49.7082.794.0
Betschdorf, France
+33.3.88.90.64.90
Warsaw, Poland
+48.22.209.98.35
Assago, Italy
+39.02.932.7141
Chat with us:
nvent.com/schroff

Asia
Shanghai, China
+86.21.2412.6943
Qingdao, China
+86.532.8771.6101
Singapore
+65.6768.5800
Shin-Yokohama, Japan
+81.45.476.0271
Chat with us:
nvent.com/schroff

Middle East & India
Dubai, United Arab Emirates
+971.4.378.1700
Bangalore, India
+91.80.6715.2001
Istanbul, Turkey
+90.216.250.7374
Chat with us:
nvent.com/schroff

©2026 nVent. All nVent marks and logos are owned or licensed by nVent Services GmbH or its affiliates. All other trademarks are the property of their respective owners. nVent reserves the right to change specifications without notice.

This document is system-generated.